Boss Hydraulics
19 Ricketts Rd
Mt Waverley Vic 3149
PH: +613 9562 8800

PARTS LIST

(Form #BPL1142)

Part # C1510
Model B

Item	Part #	Qty	Description
1	1B12659	1	Rubber Protective Cover
2*	1B12660	1	Wiper
3	1B12661	1	Stop Ring
4	1B12662	1	Saddle
5	1B12663	1	Saddle Ring
6	1B12664	2	Screw
7*	1B12665	2	Copper Washer
8	1B12686	1	Piston Rod
9	1B12667	1	2-Piece Rod Bearing
10*	1B12668	1	Piston Washer
11*	1B12669	1	Back-Up Ring
12*	1B12670	1	U-Cup
13	1B12671	1	Retaining Ring
14	1B12687	1	Retracting Spring
15	1B12688	1	Cylinder Body
16	FMC6	1	Coupler
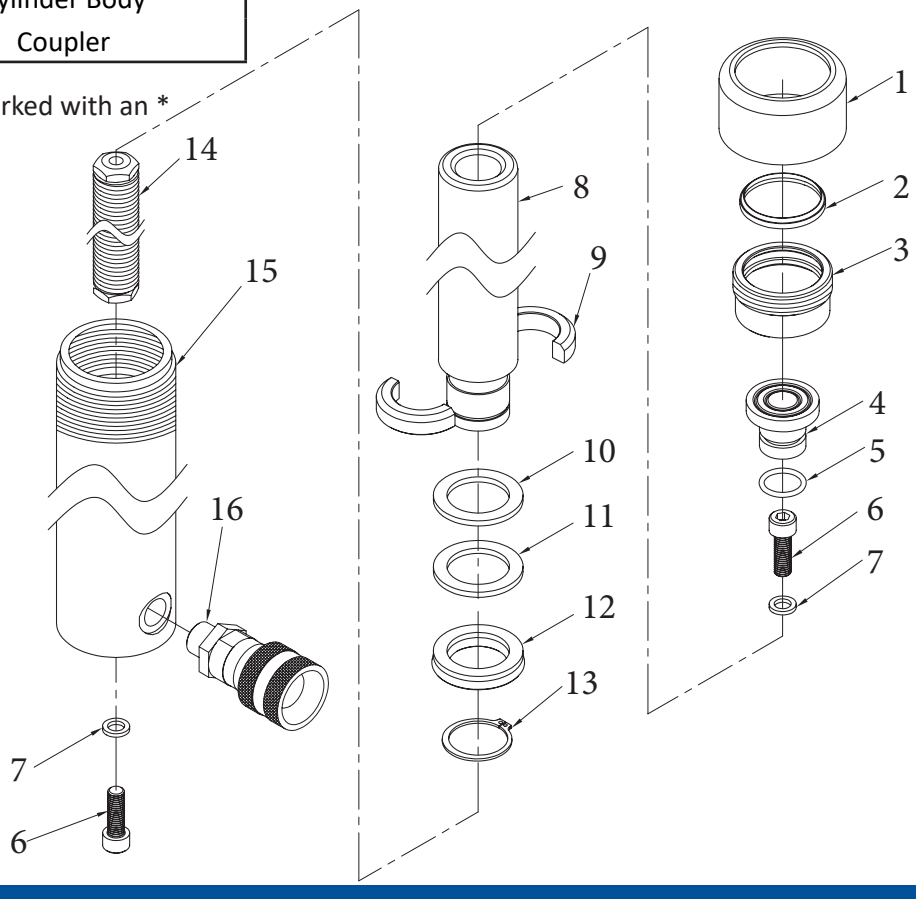
Repair kit 1BK2695 includes all items marked with an *