PARTS LIST

Boss Hydraulics
19 Ricketts Rd
Mt Waverley Vic 3149
PH: +613 9562 8800

(Form # BPL1023)

Model # C252

Item	Part #	Qty	Description
1	1B11233	1	Cylinder body
2	1B11234	1	Piston Rod
3	1B11060	1	Brass Bushing
4*	1B11646	1	Back-Up Ring
5*	1B11434	1	U-Cup Seal
6	1B11537	1	Retaining Ring
7	1B11111	2	Spring Lock
8	1B11564	1	Retracting Spring
9*	1B11398	2	Copper washer
10	1B11503	2	Screw
11	1B11232	1	Gland nut
12*	1B11378	1	Wiper
13	1B11004	1	Saddle
14	1B11393	1	Ram Sleeve
15	FMC6	1	Quick Coupler
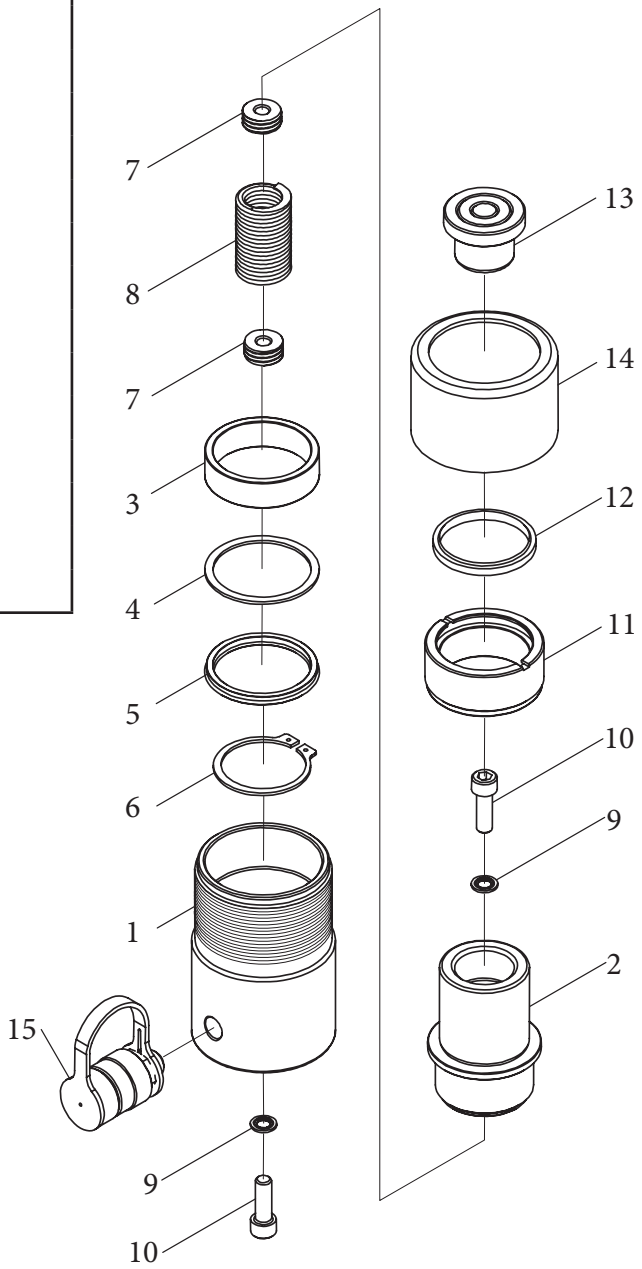
Repair kit 1BK1833 includes all items marked with an *